EXTERNAL VIEW

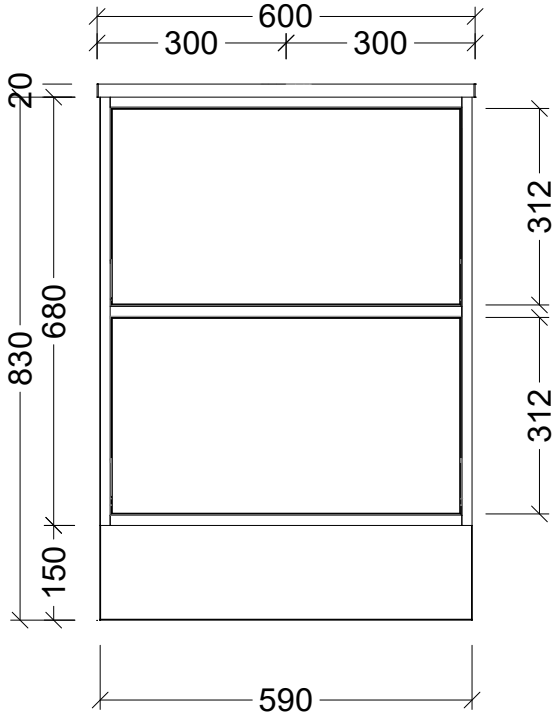

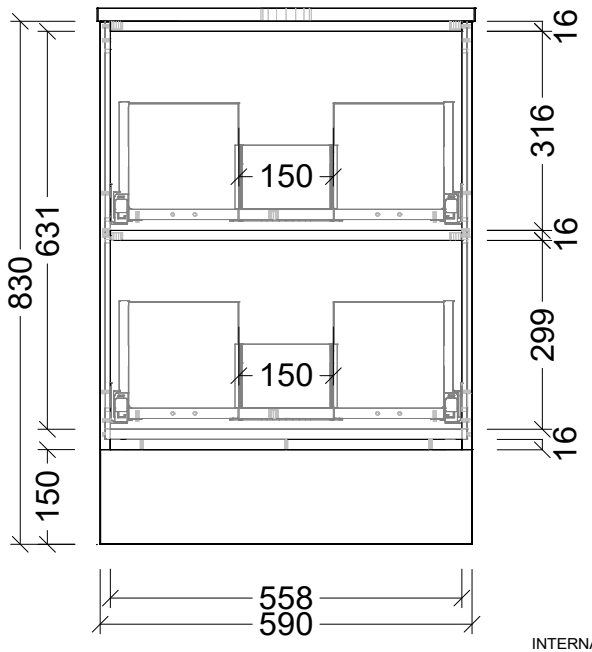

INTERNAL VIEW

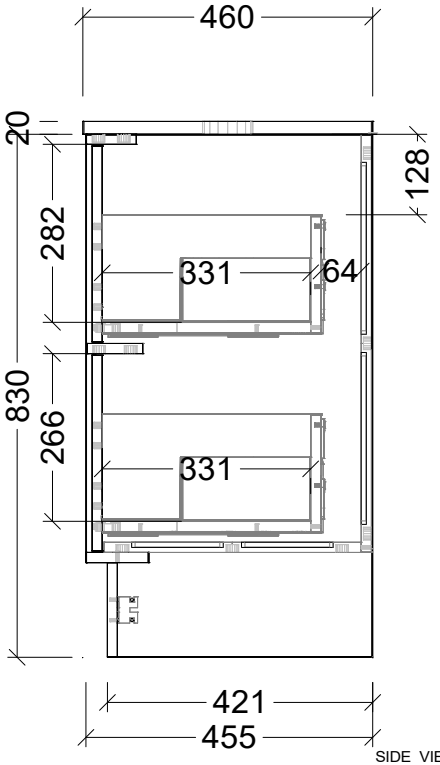

SIDE VIEW

Range	Taro Vanity
Mount	Floor Standing
Size	600
SKU	TAR-V-600-C-SSA-F

TOP DETAILS

Available Tops	1 - SilkSurface
	2
	3
	4
Top Notes	

NOTES

Revision	01
Date	05/12/25

DIMENSIONS SHOWN ARE IN MILLIMETERS, ARE NOMINAL ONLY AND SUBJECT TO CHANGE AT ANY TIME.
DO NOT SCALE DRAWINGS.
INSTALLER TO CONFIRM ALL DIMENSIONS ON-SITE PRIOR TO INSTALL.
SIZE VARIATION (+/- 3%) IS TO BE EXPECTED ON CERAMIC TOPS.
E&OE.

Copyright ©

Timberline

22 Myrtle Drive, Armidale NSW 2350
www.timberline.com.au
02 6773 8500