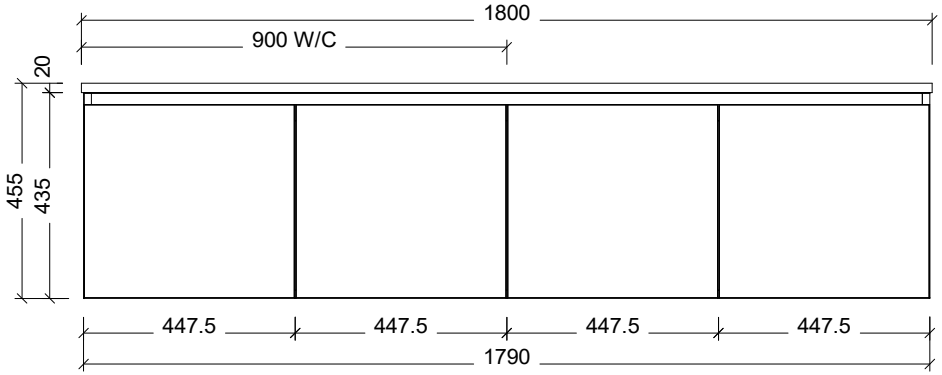

Render above indicates grain direction on fronts and side panels

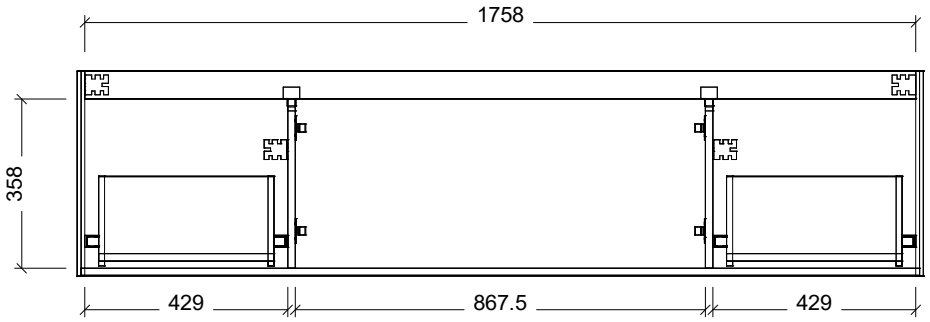

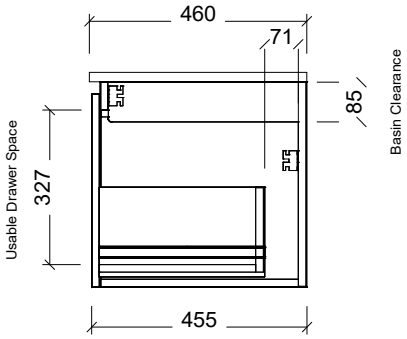

Range	Oregon
Mount	Wall Hung
Size	1800 Centre Bowl
SKU	ORE-V-1800-C-X-W

TOP DETAILS

Available Tops	1. SilkSurface 20mm
	2. Regal Acrylic
	3. Stadium Acrylic

NOTES

Revision	01
Date	25/08/23

DIMENSIONS SHOWN ARE IN MILLIMETERS, ARE NOMINAL ONLY AND SUBJECT TO CHANGE AT ANY TIME.
DO NOT SCALE DRAWINGS.
INSTALLER TO CONFIRM ALL DIMENSIONS ON-SITE PRIOR TO INSTALL.
SIZE VARIATION (+/- 3%) IS TO BE EXPECTED ON CERAMIC TOPS.
E&OE.

Copyright ©

Timberline

22 Myrtle Drive, Armidale NSW 2350
www.timberline.com.au
02 6773 8500