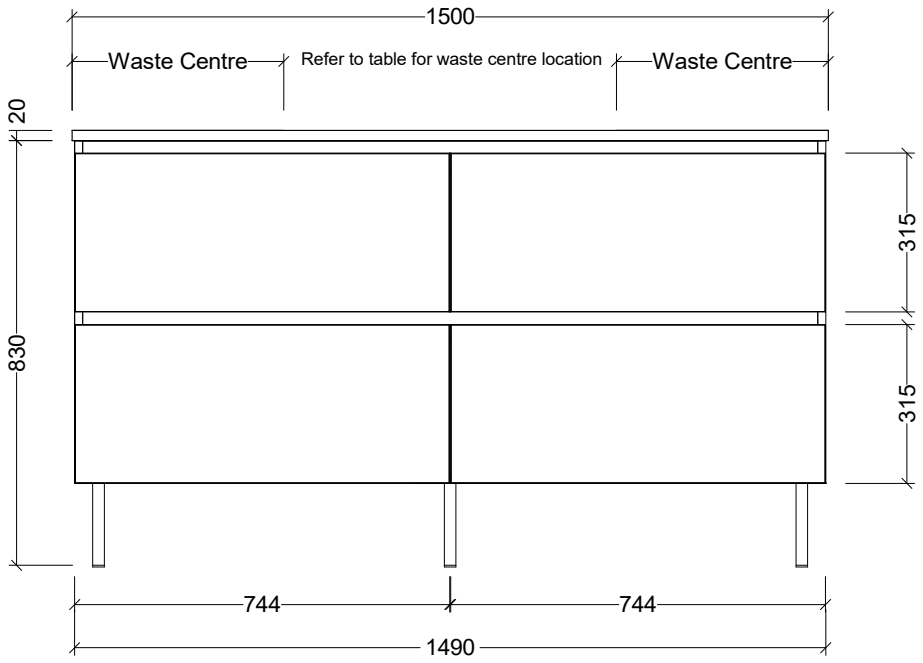

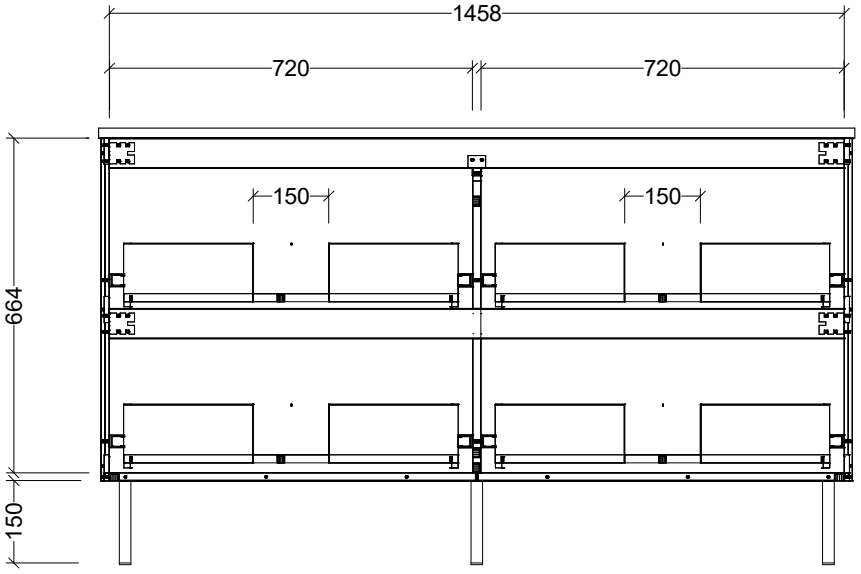

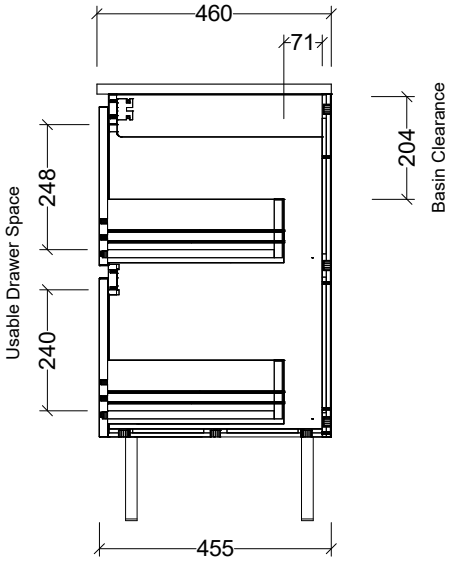

Timberline

CABINET DETAILS	
Range	Hunter Plus 1500
Description	Legs, Double Bowl
Cabinet SKU	HUNP-VCO-1500-D-X-L
TOP DETAILS	
Available Tops:	Waste Centres (mm):
Alpha Ceramic	420
Regal Mineral	420
Stadium Mineral	420
SilkSurface	375
Stone	375

Timberline Bathroom Products Pty Ltd
22 Myrtle Drive, Armidale NSW 2350
www.timberline.com.au | 02 6773 8500

PLEASE NOTE: Due to the manufacturing process of ceramic tops, size variation (+/- 3%) is to be expected. E&OE. Copyright ©