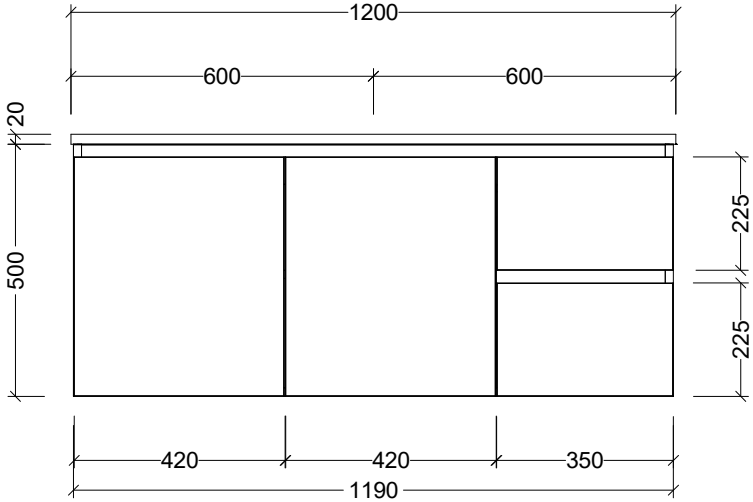

LH and RH Drawer Options Available

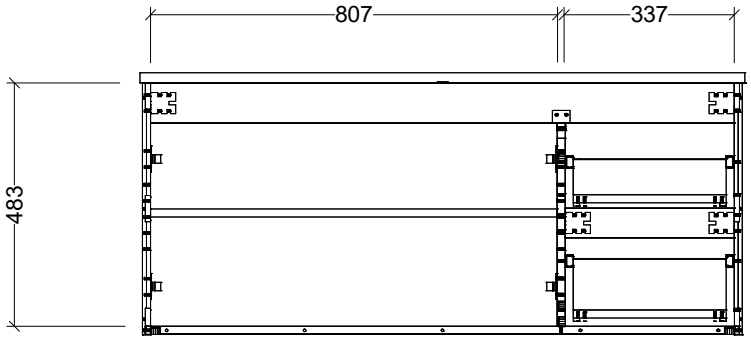

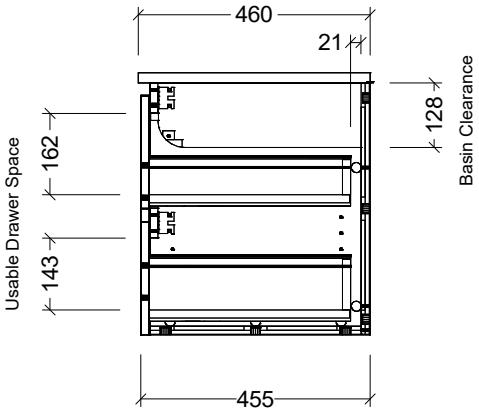

Timberline

CABINET DETAILS	
Range	Hunter 1200
Description	Centre Bowl Wall Hung
Cabinet SKU	HUN-VCO-1200-C-X-W
TOP DETAILS	
Available Tops:	Alpha Ceramic
	Regal Mineral
	Stadium Mineral
	SilkSurface
	Stone

Timberline Bathroom Products Pty Ltd
22 Myrtle Drive, Armidale NSW 2350
www.timberline.com.au | 02 6773 8500

PLEASE NOTE: Due to the manufacturing process of ceramic tops, size variation (+/- 3%) is to be expected. E&OE. Copyright ©