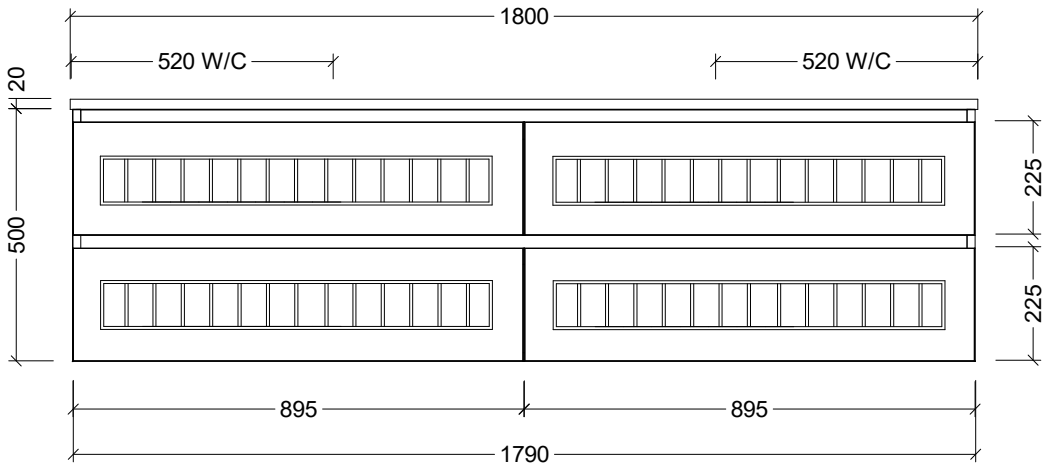

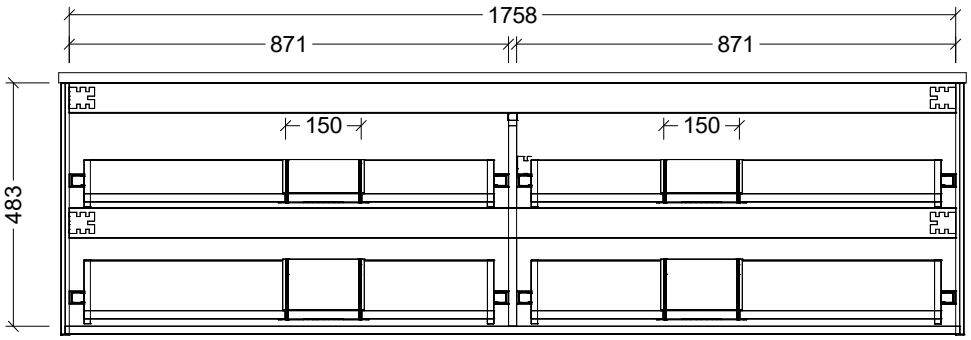

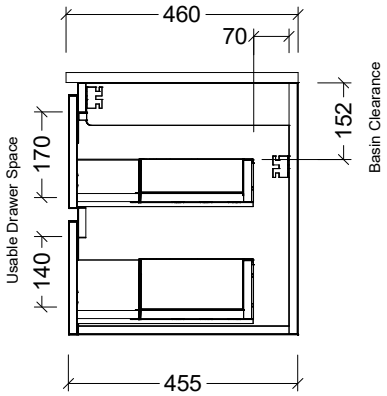

Range	Austin Plus Cambridge 1800
Mount	Wall Hung
Size	1790W x 455D x 500H
SKU	AUPC-VCO-1800-D-X-W

TOP DETAILS

Available Tops	Regal Mineral
	Stadium Mineral
Top Notes	Double Bowl

NOTES

Revision	01
Date	24/04/23

DIMENSIONS SHOWN ARE IN MILLIMETERS, ARE NOMINAL ONLY AND SUBJECT TO CHANGE AT ANY TIME.
DO NOT SCALE DRAWINGS.
INSTALLER TO CONFIRM ALL DIMENSIONS ON-SITE PRIOR TO INSTALL.
SIZE VARIATION (+/- 3%) IS TO BE EXPECTED ON CERAMIC TOPS.
E&OE.

Copyright ©

Timberline

22 Myrtle Drive, Armidale NSW 2350
www.timberline.com.au
02 6773 8500